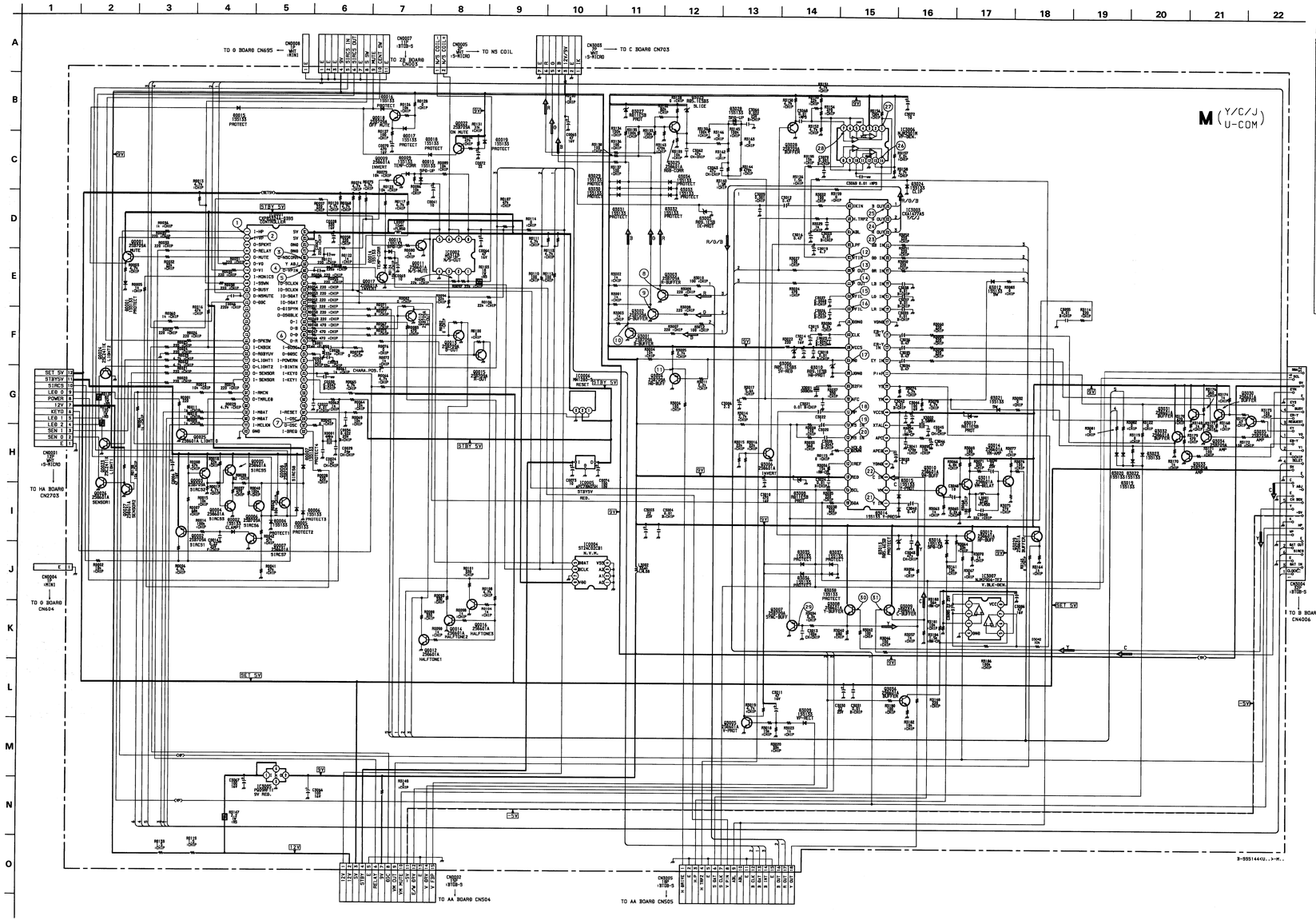

M BOARD TRANSISTOR VOLTAGE LIST

	E	C	B
Q0001	5.1	-2.0	5.0
Q0002	5.1	4.9	4.8
Q0003	5.1	0	5.0
Q0004	GND	0	0.7
Q0005	0	5.1	0
Q0006	0	0	5.0
Q0007	GND	5.1	0
Q0008	0	0	5.0
Q0009	GND	7.1	0.4
Q0010	0	GND	0
Q0011	GND	8.2	0
Q0012	GND	0	0
Q0013	0	GND	0
Q0014	GND	0	0
Q0015	0	GND	0
Q0016	GND	0	0
Q0017	GND	0.7	0.7
Q0018	8.9	-0.5	9.1
Q0022	9.1	0	9.0
Q0011	2.5	GND	1.8
Q3002	2.5	GND	1.8
Q3003	2.4	GND	1.7
Q3004	3.2	GND	4.2
Q3005	GND	0	0.8
Q3006	GND	7.5	0
Q3007	3.0	GND	2.3
Q3008	2.3	9.1	2.9
Q3009	3.1	9.1	3.7
Q3010	6.8	9.1	7.8
Q3011	1.6	7.6	2.2
Q3012	0.9	9.1	0.5
Q3014	0.9	6.0	1.5
Q3025	4.4	9.1	4.2
Q3028	3.6	GND	3.0

All voltages are in V.

M BOARD IC VOLTAGE LIST

IC0001	① 0.9	⑪ 0	㉑ 4.8	㉛ 5.0	㊶ 0
	② 0.6	⑫ 0	㉒ 4.8	㉜ 5.1	㊷ 1.1
	③ 0	⑬ 5.1	㉓ 5.2	㉝ 3.0	㊸ 1.3
	④ 4.7	⑭ 0	㉔ GND	㉞ 3.0	㊹ 0.8
	⑤ 5.1	⑮ 0	㉕ 4.2	㉟ 0	㊺ GND
	⑥ 0	⑯ 0	㉖ 2.6	㊱ 0	㊻ GND
	⑦ 4.9	⑰ 0	㉗ 2.3	㊲ 0	㊼ 5.1
	⑧ 0	⑱ 0	㉘ 5.1	㊳ 0	㊽ 5.1
	⑨ 5.1	⑲ *	㉙ 0	㊴ 0	
	⑩ 0	⑳ *	㉚ 0	㊵ 0	
	⑪ 0	㉑ 0	㉛ 1.9	㊶ 4.7	
	⑫ 0	㉒ 4.9	㉜ 1.9	㊷ 4.7	
	⑬ 0	㉓ 0	㉝ 5.0	㊸ 4.7	
	⑭ 0	㉔ 0.2	㉞ 5.1	㊹ 0.2	
IC0002	① 3.7	③ 6.0	⑤ 8.2	⑦ 8.2	
	② 6.0	④ GND	⑥ 8.2	⑧ 11.8	
IC0004	① GND	③ GND	⑤ 4.7	⑦ GND	
	② GND	④ GND	⑥ 4.6	⑧ 5.1	
IC0005	IN 15.4	OUT 5.1			
IC3003	① 4.7	⑪ 0	㉑ 0	㉛ 4.2	㊶ 3.4
	② 7.4	⑫ 5.7	㉒ 1.8	㉜ 3.1	㊷ 4.0
	③ 3.1	⑬ 6.4	㉓ 1.8	㉝ 4.2	㊸ 3.4
	④ GND	⑭ 6.4	㉔ 1.8	㉞ GND	㊹ 0
	⑤ 4.1	⑮ GND	㉕ 4.5	㉟ 4.8	㊺ 3.7
	⑥ 4.1	⑯ 4.6	㉖ 2.9	㊱ 5.3	㊻ 9.1
	⑦ 2.4	⑰ 4.6	㉗ 1.8	㊲ 4.1	㊼ 4.6
	⑧ 9.1	⑱ 4.5	㉘ 7.5	㊳ GND	㊽ 4.7
	⑨ 0	⑲ 0	㉙ 4.9	㊴ 2.7	
	⑩ 0	⑳ 0	㉚ 3.0	㊵ 4.3	
IC3005	① 11.3	② 9.1	③ GND	④ 11.3	
IC3006	① 7.0	③ 4.4	⑦ 4.6	⑨ 7.9	⑮ 0.6
	② NC	⑤ GND	⑧ 4.9	⑪ 4.3	⑯ 0.6
	③ 9.1	⑥ 4.4	⑨ 4.3	⑫ GND	

All voltages are in V.

• M BOARD WAVEFORMS

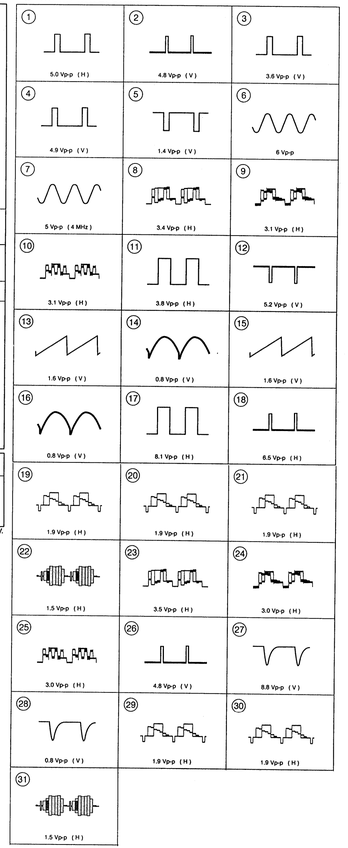

M BOARD IC3003 CXA1477AS

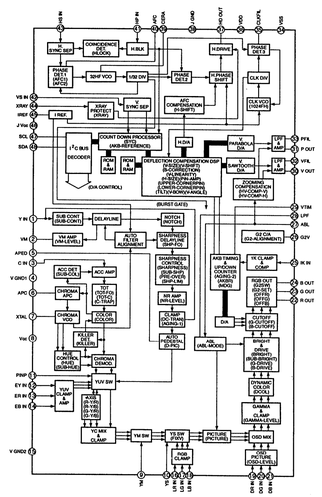
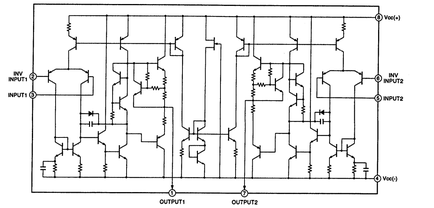
M BOARD IC002 M5216P